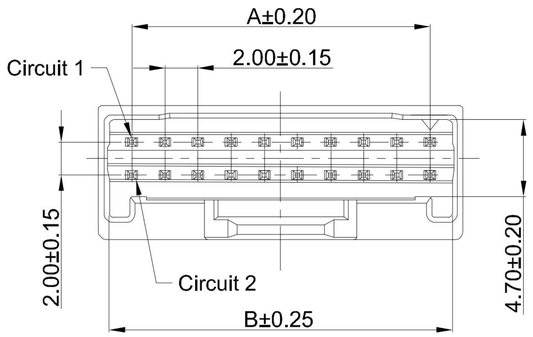

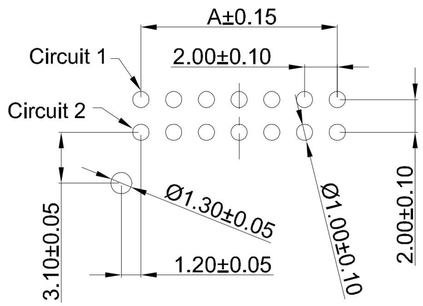

RECOMMENDED PCB LAYOUT
TOLERANCE:±0.05

G-Switch Specification:

1.Current rated: 2.0A AC/DC
2.Voltage rating: 250V AC/DC
3.Withstanding voltage: 1000V AC
4.Contact resistance: 20mΩ max.
5.Insulation resistance: 1000MΩ min
6.Durability cycle: 50Cycles
7.Removal force: 1.00kgf/Pin min
8.Operating temperature range: -40°C ~ +105°C

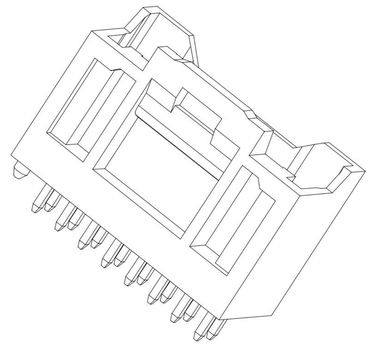

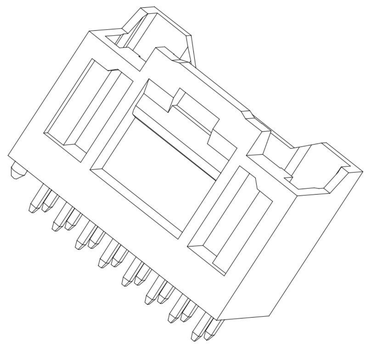

GT-A2030 W V D-2 XX X XX 01

G-Switch

Series No

Connector
W-Wafer

Angle
V-180°

Termipoint
D-DIP

Terminal Plating
BT-Bright Tin
11-All G/F

Housing Colour
S-Nature

Pin Q' PY
10~40

Row NO
2-Dual Dow

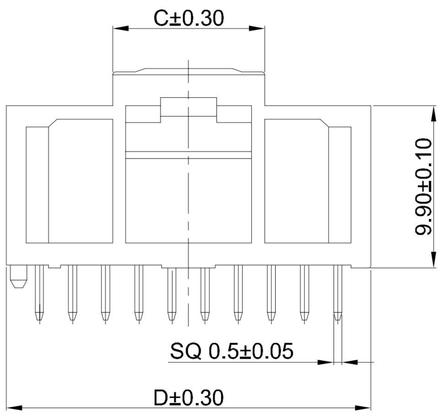

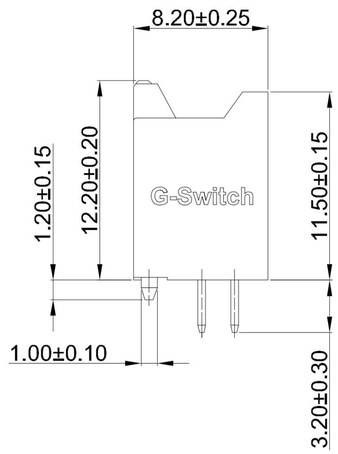

Ordering Information:

Circuit	Dimensions(mm)				Circuit	Dimensions(mm)			
	A	B	C	D		A	B	C	D
10	8.00	10.70	7.30	12.00	26	24.00	26.70	9.20	28.00
12	10.00	12.70	9.20	14.00	28	26.00	28.70	9.20	30.00
14	12.00	14.70	9.20	16.00	30	28.00	30.70	9.20	32.00
16	14.00	16.70	9.20	18.00	32	30.00	32.70	9.20	34.00
18	16.00	18.70	9.20	20.00	34	32.00	34.70	9.20	36.00
20	18.00	20.70	9.20	22.00	36	34.00	36.70	9.20	38.00
22	20.00	22.70	9.20	24.00	38	36.00	38.70	9.20	40.00
24	22.00	24.70	9.20	26.00	40	38.00	40.70	9.20	42.00

NO.	PART NAME	MATERIAL	REMARK
2	PIN MATERIAL	BRASS	BRIGHT Tin/All G/F
1	HOUSING	PA46,94V-0	NATURE

Pb Process Capable | RoHS Compliant EU RoHS Standards | Compliant Halogen Free

SCALE: 1:1	UNIT: mm	Title:	Wafer 2.00mm Pitch 180° DIP With Lock Type Dual Dow Connector
SIZE: A4			
Unless otherwise General Tolerance:		Molde Code:	GT-A2030WVD-2XXXXX01
X ±0.40		DRAWN	Hu
X.x ±0.30		CHECKED	Hu
X.xx ±0.20		APPROVED	Chen
X° ±5°		DATE	2022.12.28
X.x° ±3°		REV:	A0
		SHEET:	1/1

品赞科技 G-Switch
www.dg-switch.com